Emmet County, Iowa
Iowa North Zone (1401)
Horiz. Datum: NAD83(1996)
Vert. Datum: NAVD 1988
US Survey Feet
2006

Point Name: **102**

Designation: 06-102 (K8) Emmet Co GPS Control Point

Northing: **3987255.47**sft Easting: **4563166.11**sft

Orthometric Height: **1305.60**sft Ellipsoid Height: **1213.10**sft **Geoid03**

Latitude: **43°25'49.91609"N** Longitude: **94°50'52.72976"W**

Mapping Angle: **-0°54'49"** Combination Scale Factor: **0.99997618**

Monument Type: Berntsen Top Security Rod Monument with a 3-1/4" dia. domed survey cap and permanent magnet encased in a 5" dia. PVC pipe with a NGS style aluminum access cover.

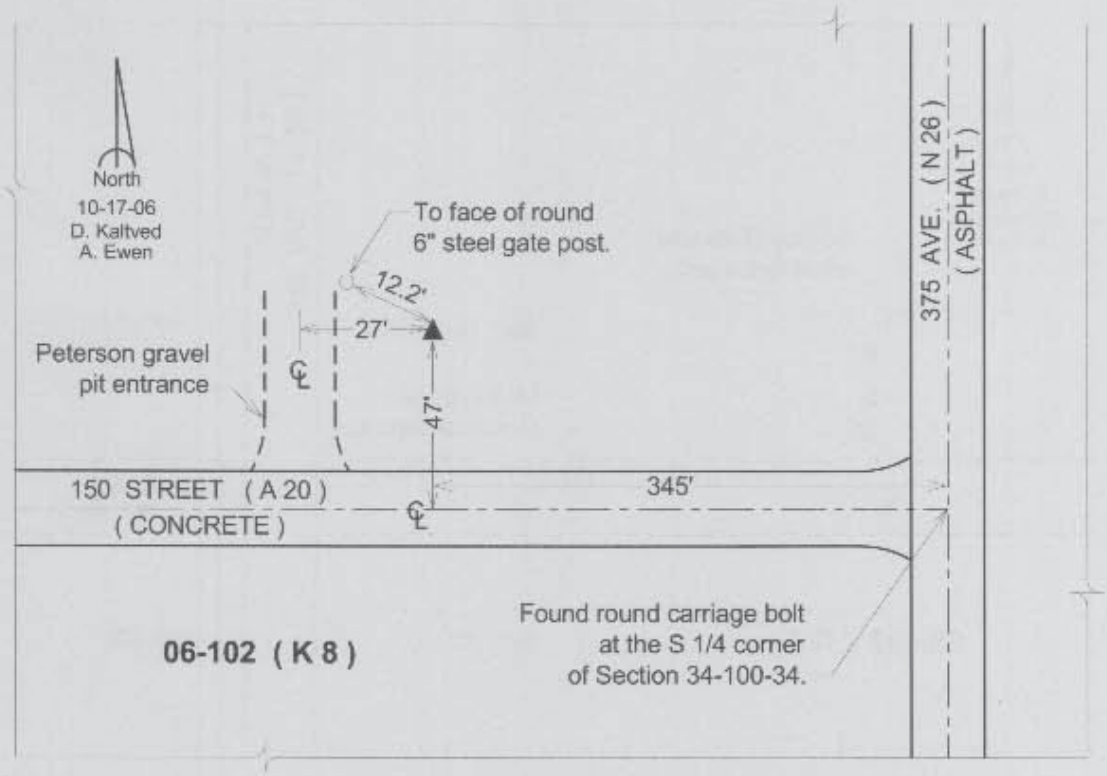

This document was prepared by DCI and GBC for use by Emmet County, Iowa.